2013-12-28 ROUGH OUTLINE 5-1

0) ETHICS
- TRUTH
- HAPPINESS
- WRONG
- $EV = KC_F^2$ ← + CONSTR. STRUCT. OPT. SYS. CONT. DATA.

$K = 1 \pm 0.25$

1) BASE REQUIREMENTS
- FOOD
- SLEEP
- EXERCISE

(TIME COSTS)

2) OBJECTIVES (CONTINUOUS / DISCRETE)
- DISCRETE → TMOI

[TELEPATHY MACHINE 01]

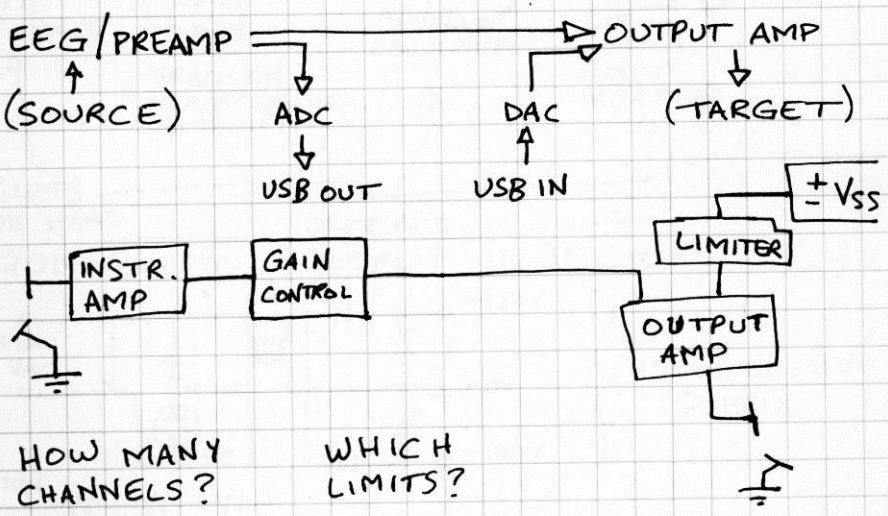

HOW MANY CHANNELS?

WHICH LIMITS?

PHYSICAL STRUCTURE?

HOW MANY CHANNELS DOES A TYPICAL EEG HAVE?

TITLE/NO.

2014-01-09 TM01 COMPONENTS

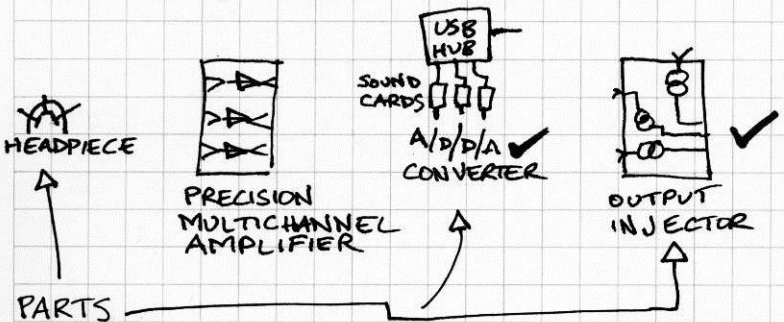

2014-01-15 OUTPUT INJECTOR

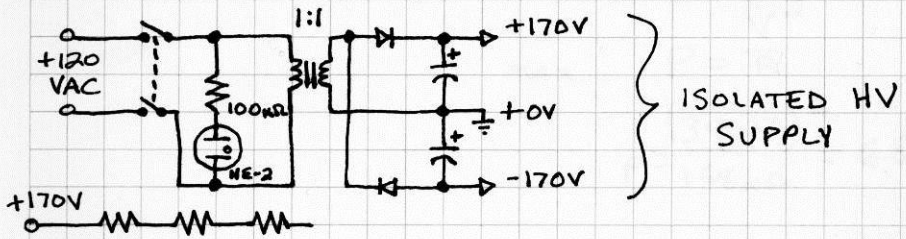

2014-01-17 TELEMACH 01 OUTPUT

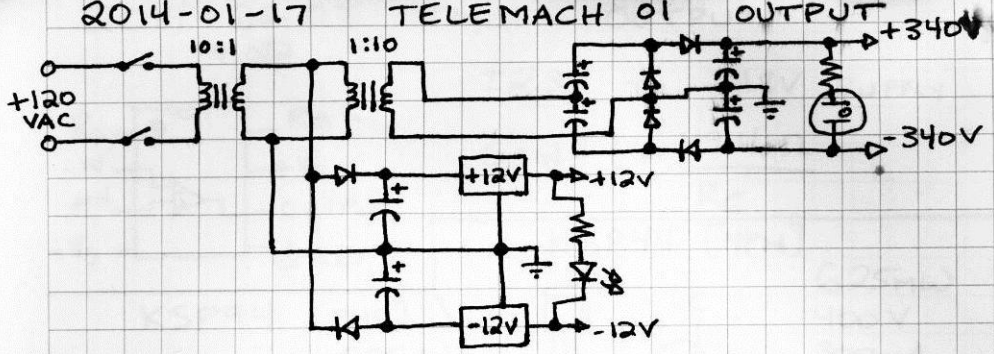

$R_{HUMAN} = 20 \pm 17k\Omega$

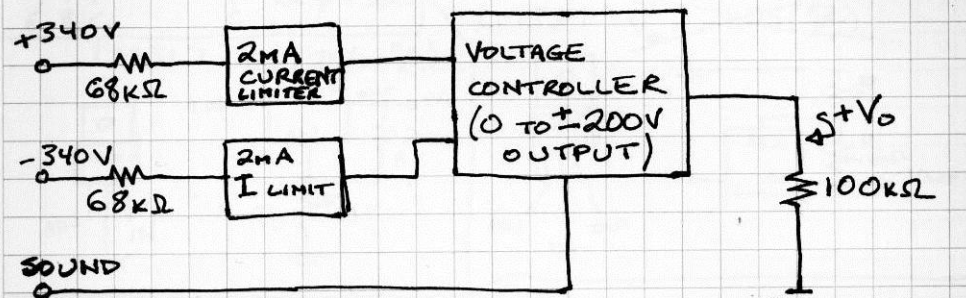

WITH OUTPUT SET TO MAX,

$$\pm I^{MAX}_{HUMAN} = \frac{200\,V}{103 \times 10^3\,\Omega} = 1.94\,mA$$

$$\pm I^{MIN}_{HUMAN} = \frac{200\,V}{137 \times 10^3\,\Omega} = 1.46\,mA$$

$10 \times \frac{1}{2}w$ RESISTORS = $5w$ MAX.

$$P = \frac{V^2}{R}$$

$$P = \frac{(340\,V)^2}{168k\Omega} = 688\,mW$$

TITLE / NO.

2014-02-07 TM01 OUTPUT

TL082

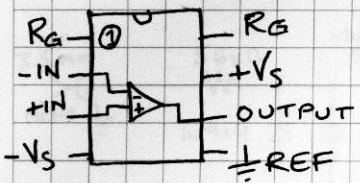

$\pm 2.3V$ TO $\pm 18V$ SUPPLY

$$GAIN = 1 + \frac{49.4K\Omega}{R_G}$$

KSP44 [NPN]

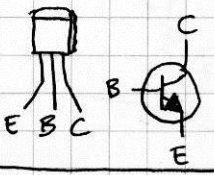

625mW
400V
300mA
$40 < \beta < 300$

KSP94 [PNP]

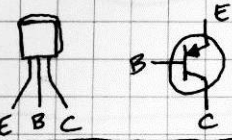

625mW
400V
300mA
$40 < \beta < 300$

LM317

$V_o = 1.25\left(1 + \frac{R_2}{R_1}\right)$

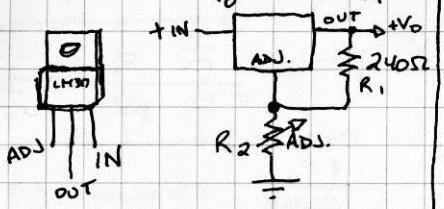

LM337

~~$V_o = -1.25\left(\frac{R_2}{R_1}\right)$~~

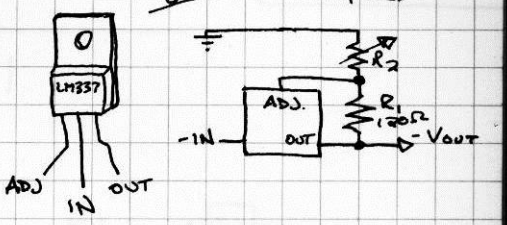

IN4937 — 600V REVERSE 1A IFWD

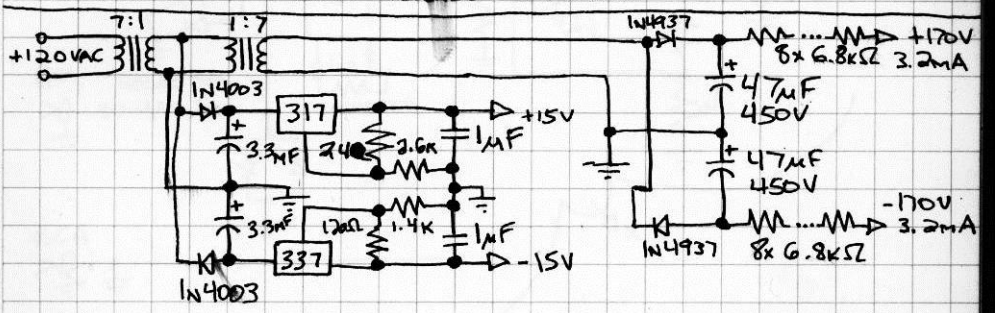

$$15 = 1.25\left(1 + \frac{R_P}{240\Omega}\right) \qquad -15 = -1.25\left(\frac{R_N}{120\Omega}\right)$$

$$12 = 1 + \frac{R_P}{240\Omega} \qquad 12 = \frac{R_N}{120\Omega}$$

$$R_P = 2.6K\Omega \qquad R_N = 1.4K\Omega$$

TM01 OUTPUT SUPPLY

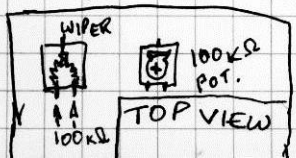

TITLE / NO.

2014-02-08

TM01 OUTPUT MODULE

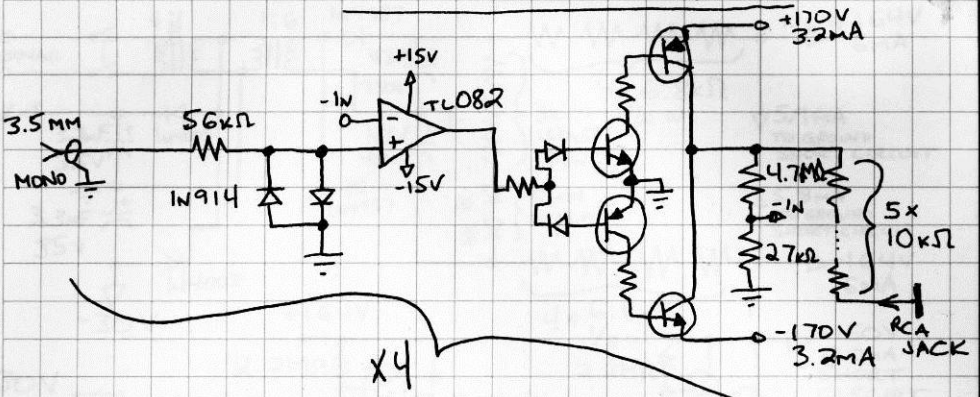

TM01 INPUT MODULE

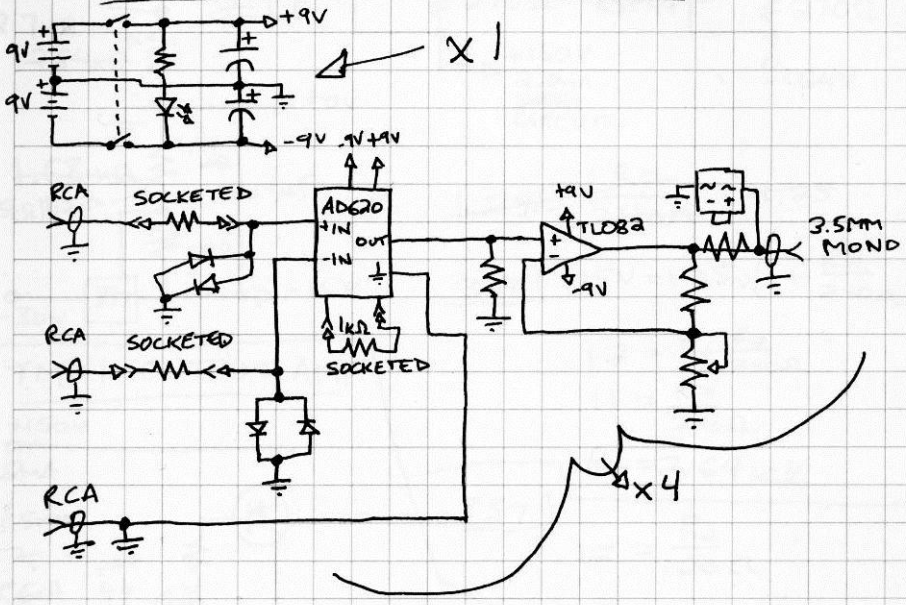

.7$_{rms}$ → 100V

$\frac{100}{.7} = 142.86$ GAIN MAX

180

TITLE / NO.

2014-02-09 TM01 OUTPUT SUPPLY

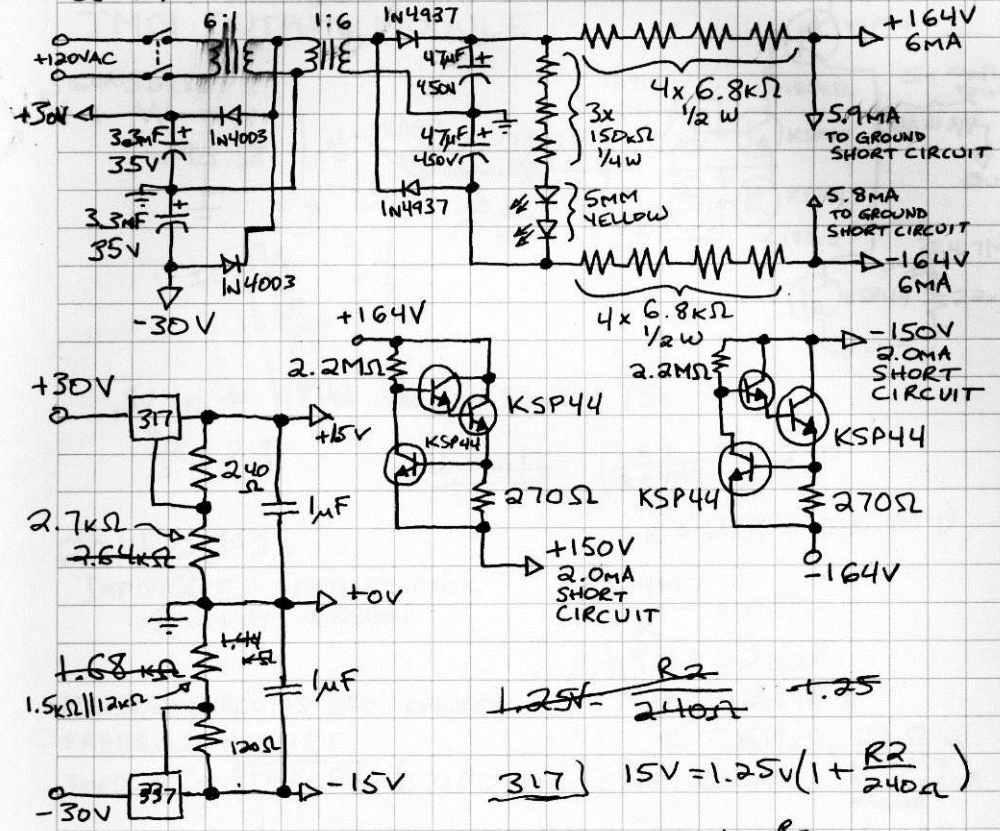

317 $15V = 1.25V\left(1 + \frac{R2}{240\Omega}\right)$

$12 = 1 + \frac{R_2}{240\Omega}$

$11 = \frac{R_2}{240\Omega}$

$R_2 = 2.64k\Omega$

337 $12 = \frac{R_2}{120\Omega}$

$R_2 = 1.44k\Omega$

TM01 OUTPUT AMP

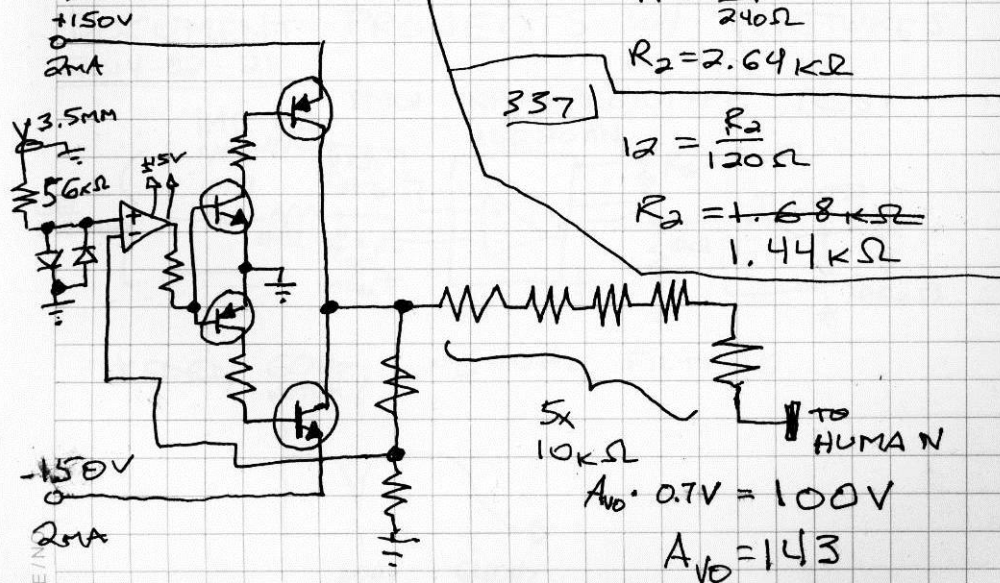

$A_{VO} \cdot 0.7V = 100V$

$A_{VO} = 143$

2014-02-18

TM01 OUTPUT MODULE

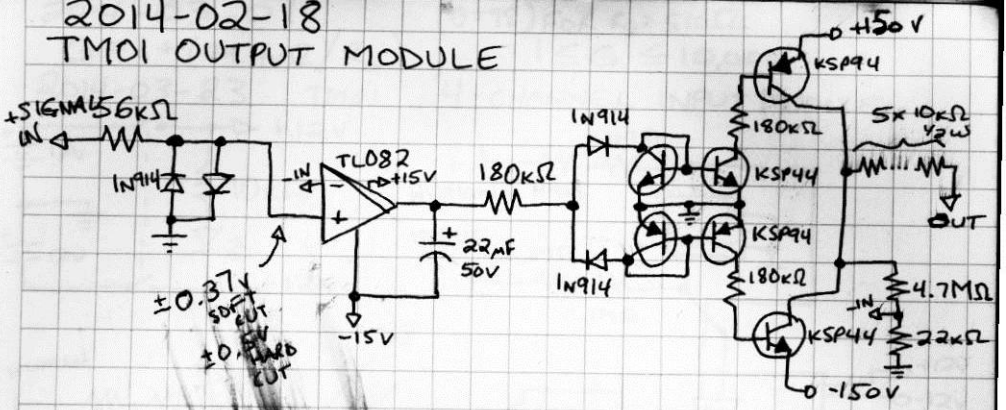

.3V IN → 1.5MA THROUGH 50kΩ = 75V

$\frac{75}{.3} = 250$

~~4.7MΩ~~ $\left(\frac{R_T}{R+4M7}\right)^{-1} = 250$

$R = 25R + (250 \cdot 4M7)$

2014-02-20

DIPTRACE - PCB EDITOR
STUDENT VERSION

$\frac{R+4M7}{R} = 250$

$R + 4M7 = 250R$

$4M7 = 249R$

$R = 18.9k\Omega$, 22kΩ IS CLOSEST AVAILABLE VALUE

ADVANCED CIRCUITS DRM CHECKER

FREEROUTING.NET

TOPO R — TOPOR (TOPOLOGICAL ROUTER)

LTSPICE | MULTISIM

"ANALOG DISCOVERY" ~~PORTAB~~ DIGILENT

DOCUMENT PROJECTS W/ PICTURES

2014-02-21

TM01 INPUT PROTOTYPE TEST

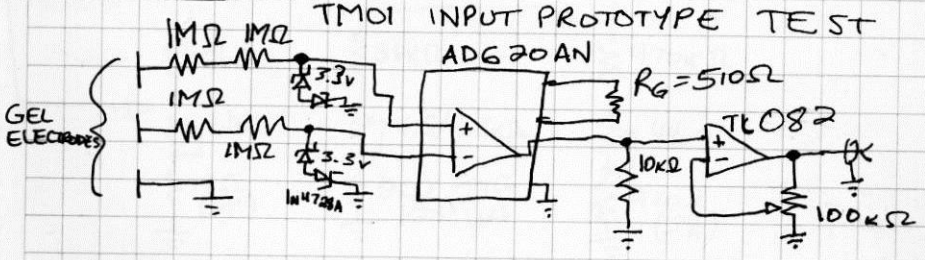

NEEDED, 60Hz NOTCH, <640Hz FILTERS

TITLE / NO.

2014-03-01

$G = 1 + (49.4\text{K}\Omega / R_G)$

(G=98) FOR $R_G = 510\Omega$

$1 \leq G \leq 10{,}000$

2014-03-23 TM01

4-CHANNEL INPUT MODULE

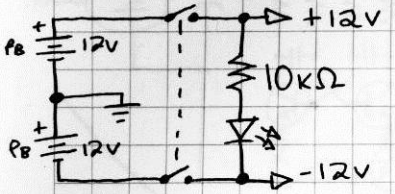

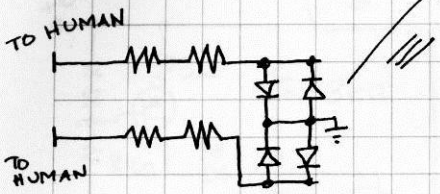

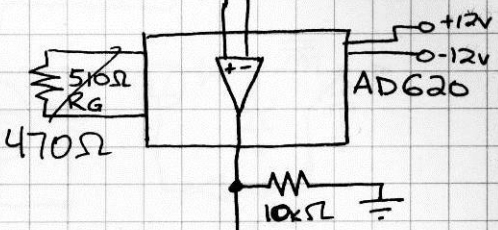

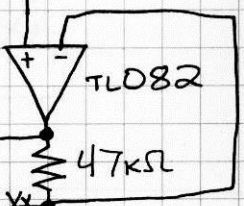

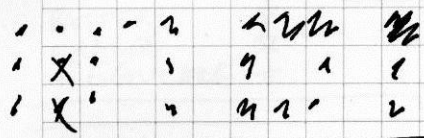

2014-03-28

$+E_H$ UNFILTERED

4.5KΩ
4.8KΩ
1.1KΩ
44KΩ
(OUT OF 47KΩ)

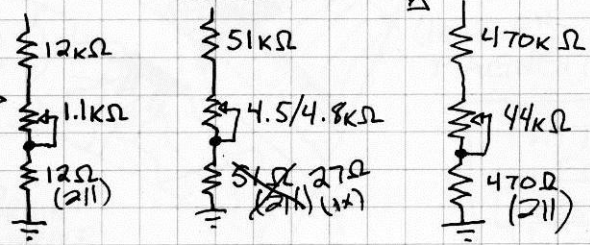

CH.1 CH.2/3 CH.4

MAX. GAIN 2000

TITLE / NO.

2014-04-22 SOLAR POWER TO CHARGE AA CELLS

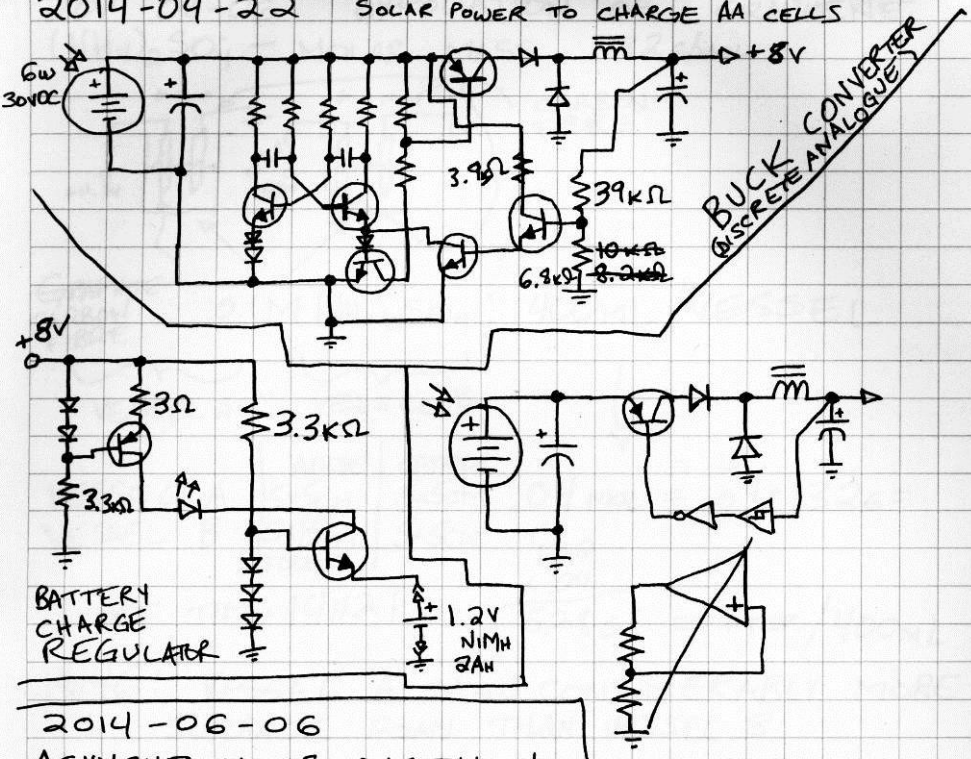

2014-06-06 ASYNCHRONOUS DIGITAL NEURON

2014-07-18 INVASIVE BRAIN IMPLANT

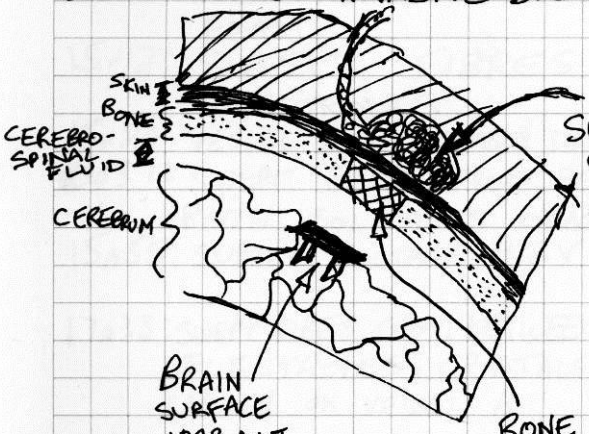

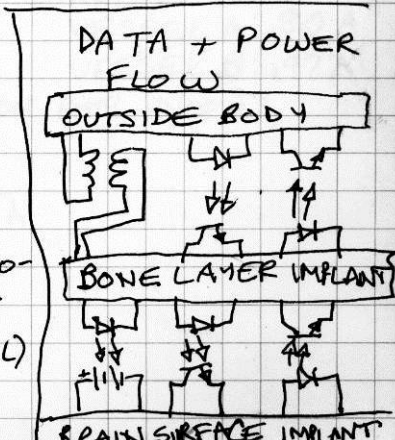

TITLE / NO.

2014-08-06 EXFOLIATION OF GRAPHENE

$(NH_4)_2SO_4$ – MOLAR MASS 132 G/MOL

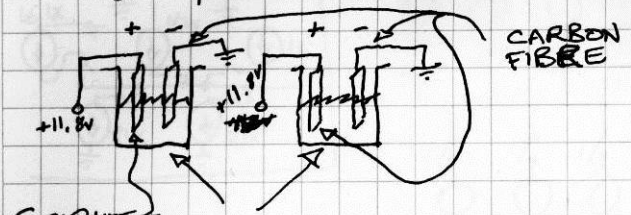

GRAPHITE CARBON FIBRE

0.1M $(NH_4)_2SO_4$; 400ML/VESSEL

VESSEL A VESSEL B

	ANODE	CATHODE
VESSEL A	5×5CM	5×5CM
VESSEL B	5×15CM FOLDED	5×5CM

.04 MOL = .04 × 132 G =

132
× .04
5.28 G; = 1 TSP./400ML

START TIME: 14H21

14H46: VESSEL A SHOWS CONSIDERABLY MORE SURFACE FOAM THAN VESSEL B

15H11: BOTH VESSELS HAVE ROUGHLY IDENTICAL QUANTITIES OF SURFACE FOAM

15H12: SWEPT FIBRES FROM BETWEEN ELECTRODES

15H20: VESSEL B NOTICEABLY DARKER THAN VESSEL A

15H37: SWEPT FIBRES FROM BETWEEN ELECTRODES, BOTH SOLUTIONS OPAQUE

15H55: SUPPLY VOLTAGE: 9.2V CURRENT TO VESSEL A: .80 A VESSEL B: .97 A

17H33: SWEPT FIBRES FROM BETWEEN ELECTRODES; CRYSTALS ON BOTH ANODES, LARGER ON VESSEL A

18H28: V_S = 10.00 V I_{VA} = 0.25 A I_{VB} = 1.03 A

18H30: CUT POWER

TITLE / NO.

2014-08-26 ARBITRARY DIGITALLY CONTROLLED CURRENT

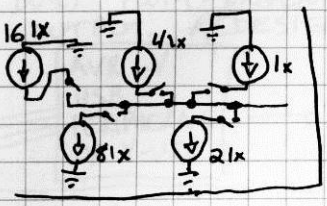

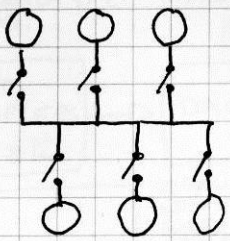

2014-11-15 USB-CONTROLLED ARBITRARY CURRENT SOURCE FOR NEURAL STIMULATION

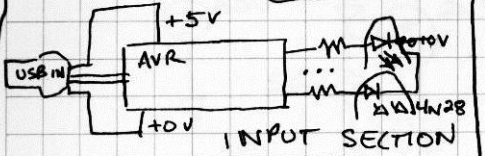

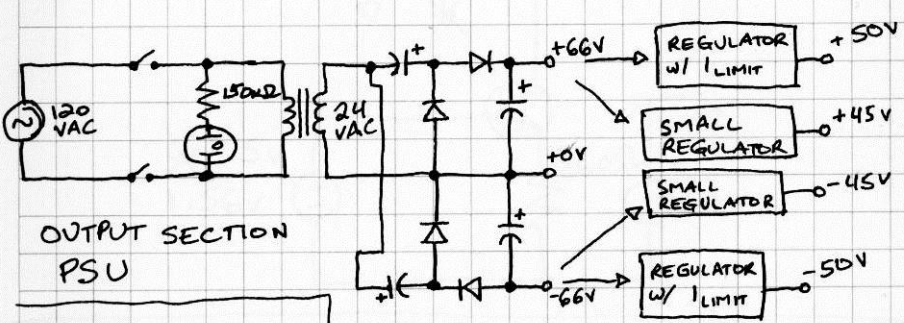

OUTPUT SECTION

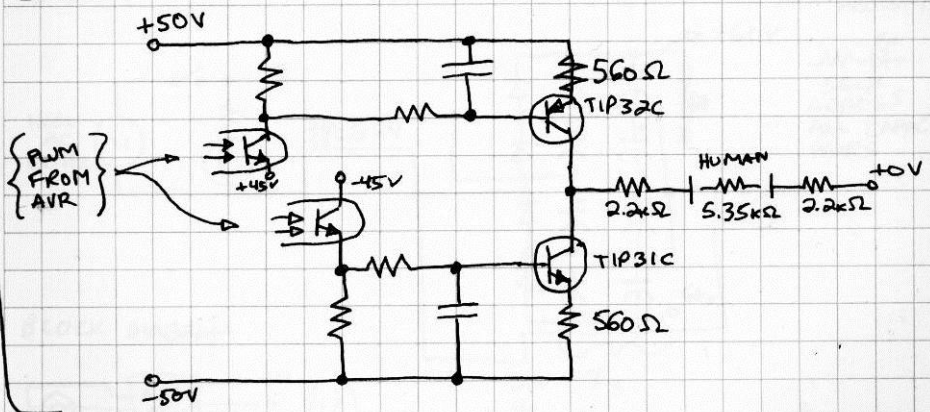

TITLE/NO.

2014-11-30 TACS DESIGN (AGAIN)

BUILT PWM-DRIVEN PROTOTYPE. UNSTABLE/NONLINEAR OUTPUT. REDESIGNING...

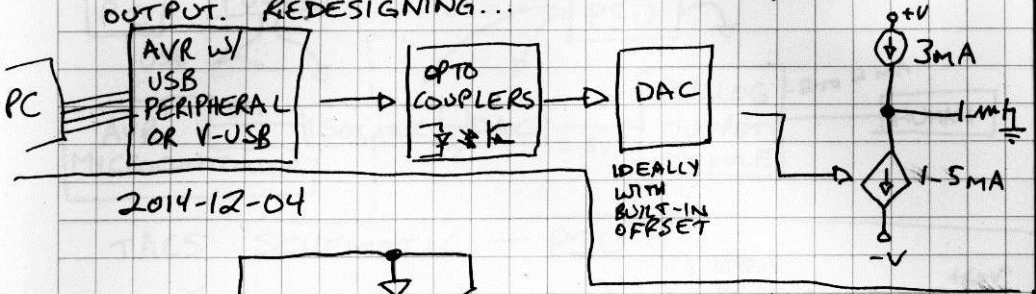

2014-12-04

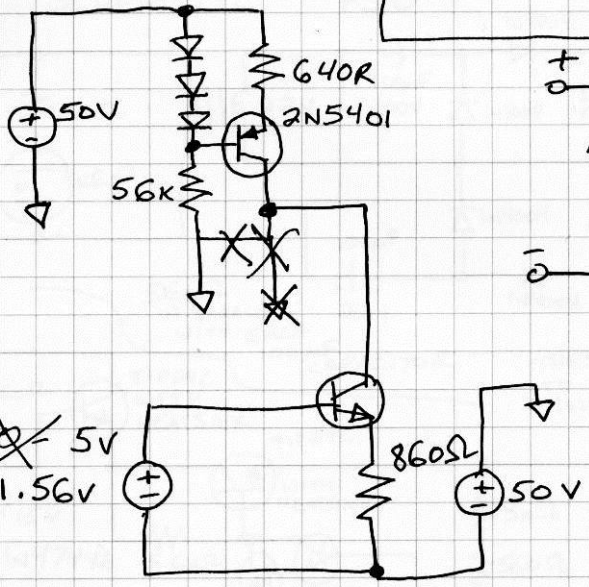

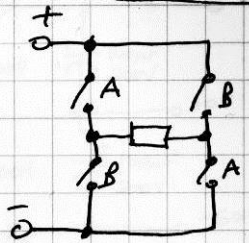

2014-12-21 TACS PSU (AS BUILT IN PROTOTYPE)

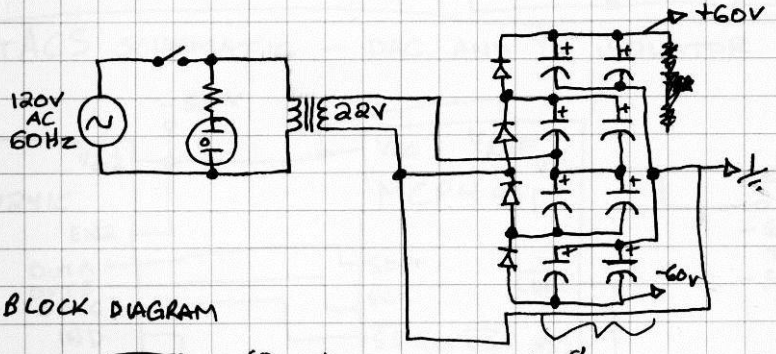

BLOCK DIAGRAM

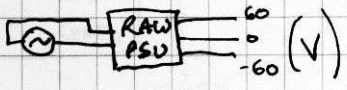

TITLE/NO.

2014-12-31 TACS BLOCK DIAGRAM

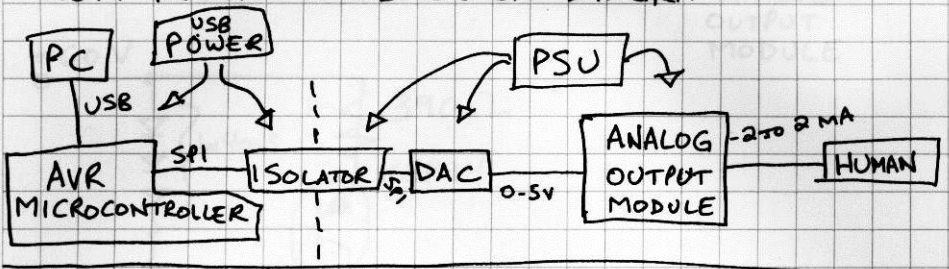

TACS SCHEMATIC — PSU

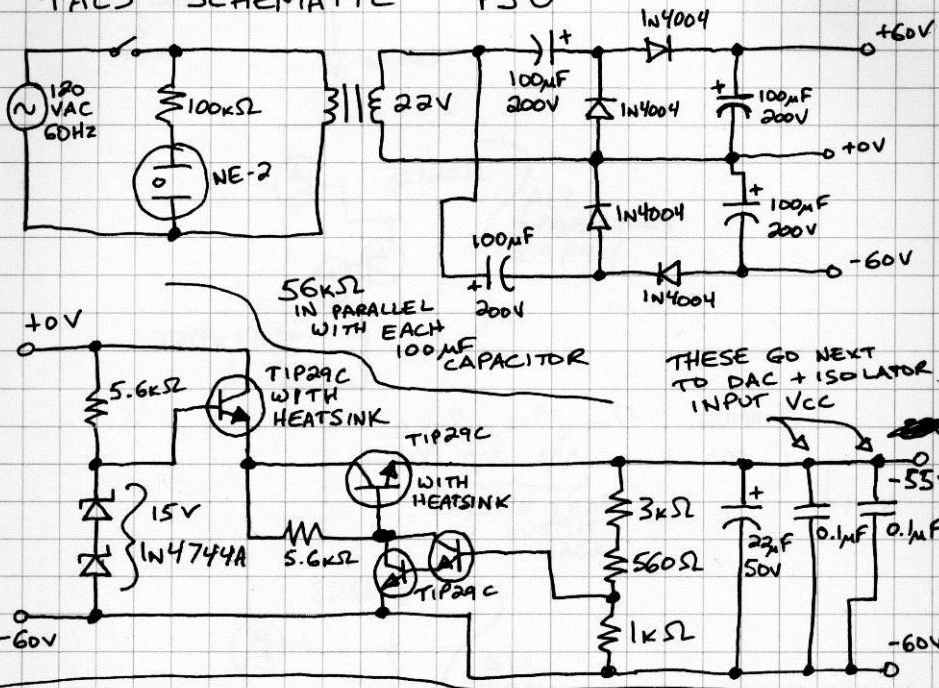

TACS SCHEMATIC — DAC AND ½ ISOLATOR

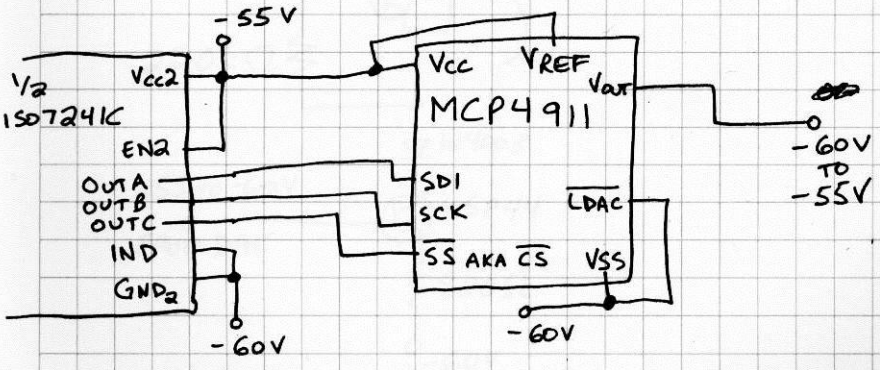

TITLE/NO.

2014-12-31 TACS SCHEMATIC - ANALOG OUTPUT MODULE

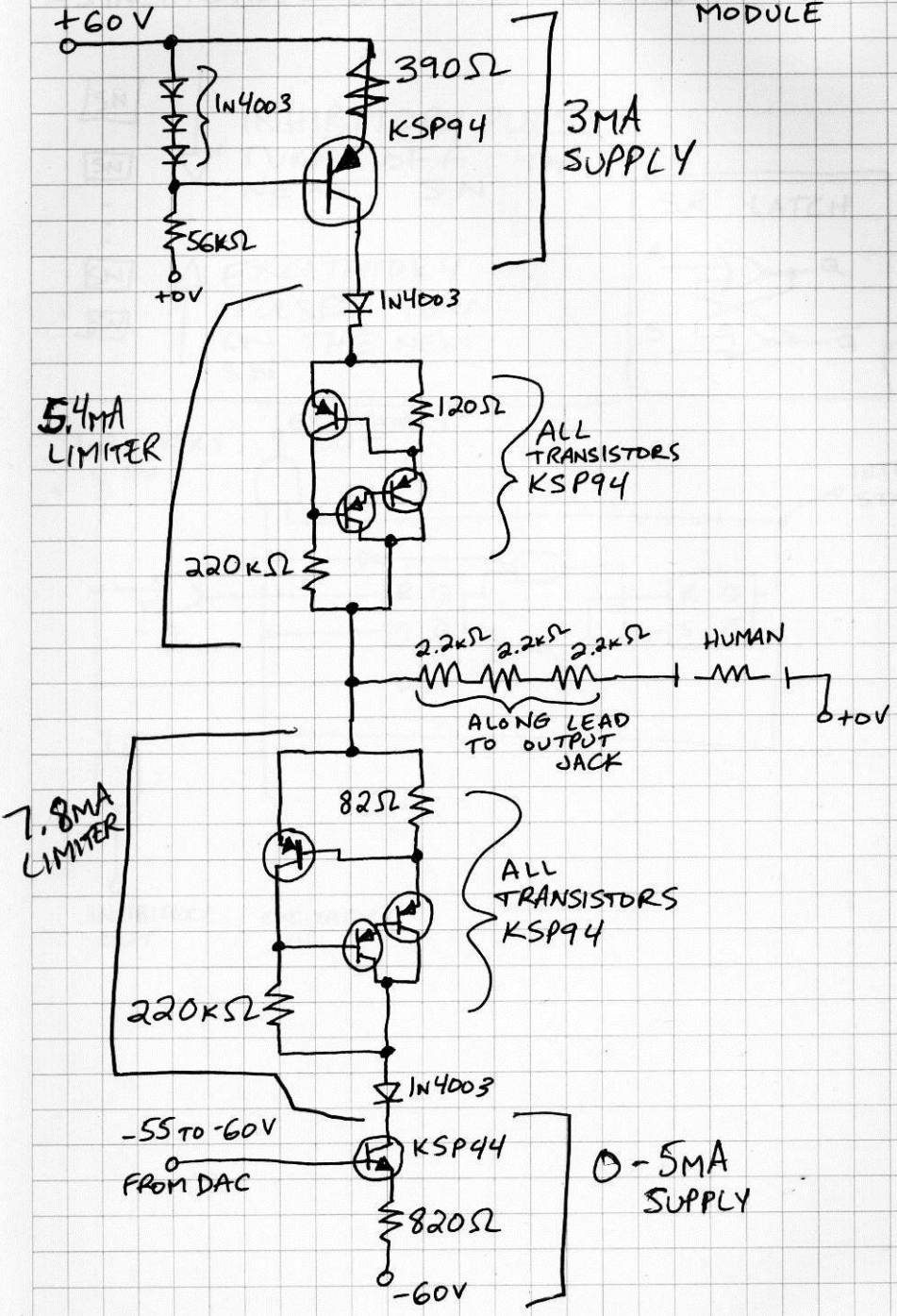

TITLE / NO.

2015-01-01 SUBNEURAL NODE FOR ASYNCHRONOUS DIGITAL NEURON

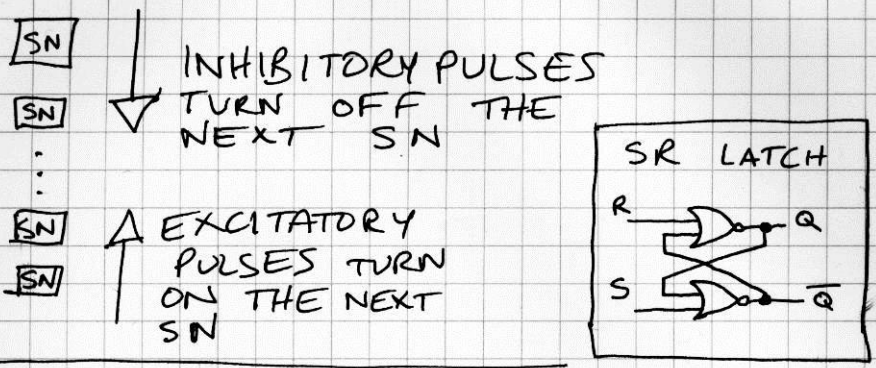

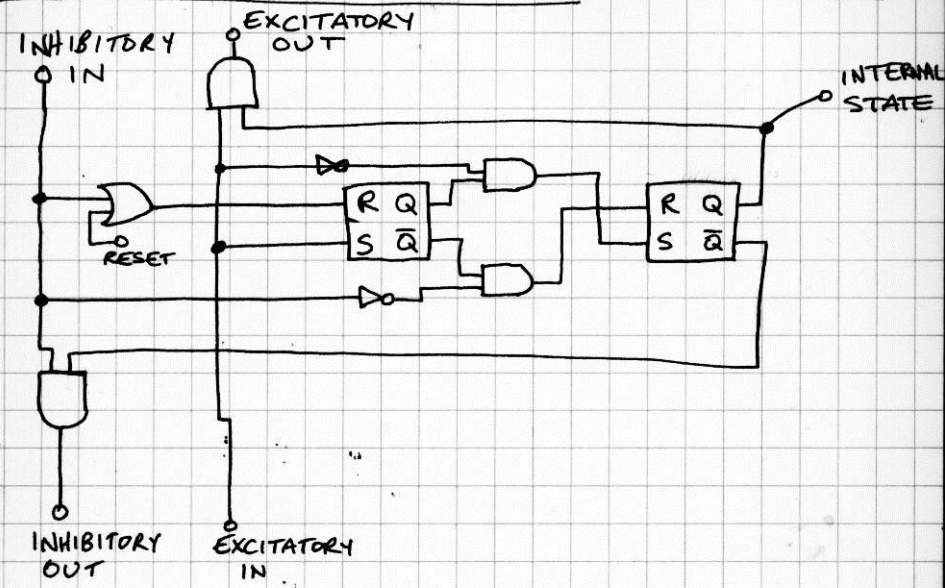

TITLE / NO.