LAB NOTEBOOK [THEO V]

02-21-13

BASIC DESIGN — RESEARCH TDCS

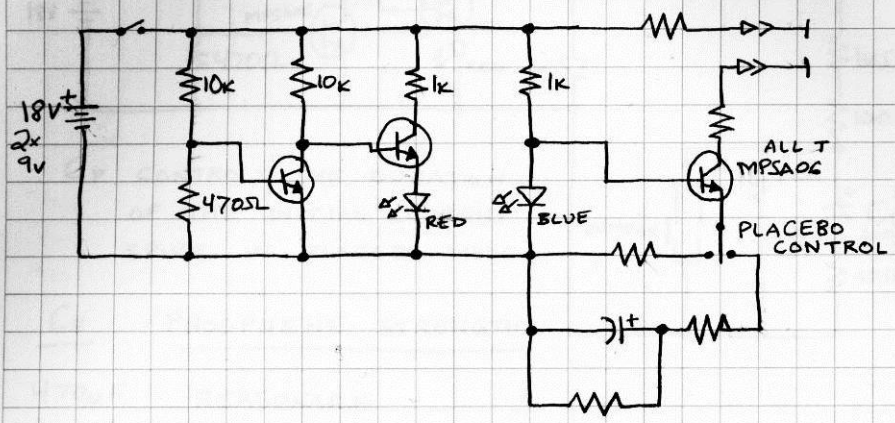

02-22-13

WHAT IS I-V CURVE OF HUMAN HEAD WITH GEL AND SPONGE ELECTRODES?

2014-11-15
HUMAN HEAD RESISTANCE WITH GEL ELECTRODES
≈ 5.35kΩ

PRESENT SHORTAGES

- ✓ 10kΩ RESISTORS
- [redacted] (ADAFRUIT IND., REV. MIDNIGHT [redacted]
- ✓ RED LEDs
- ✓ BLUE LEDs
- NEEDLE-NOSE PLIER-LIKE, RUBBER OR SILICONE JAWED TOOL TO REMOVE (+ INSERT) PARTS IN BREADBOARDS
- MULTIMETERS
- ✓ PIN HEADERS
- ✓ SOCKET ARRAYS
- ✓ 100Ω RESISTORS
- ✓ 1kΩ R FOR PROTOTYPE
- ✓ 47Ω R FOR TRIMMING I_0
- ✓ PIN JUMPERS (SHORTS TWO ADJACENT)
- ✓ 10Ω R (SPIKE SUPPRESSION)

≥50x

- ✓ TIP31C TRANSISTORS
- ~~TIP29C TRANSISTORS~~ UNAVAILABLE

02-24-13

FINAL PROTOTYPE TDCS (LED V_F MAY CHANGE)

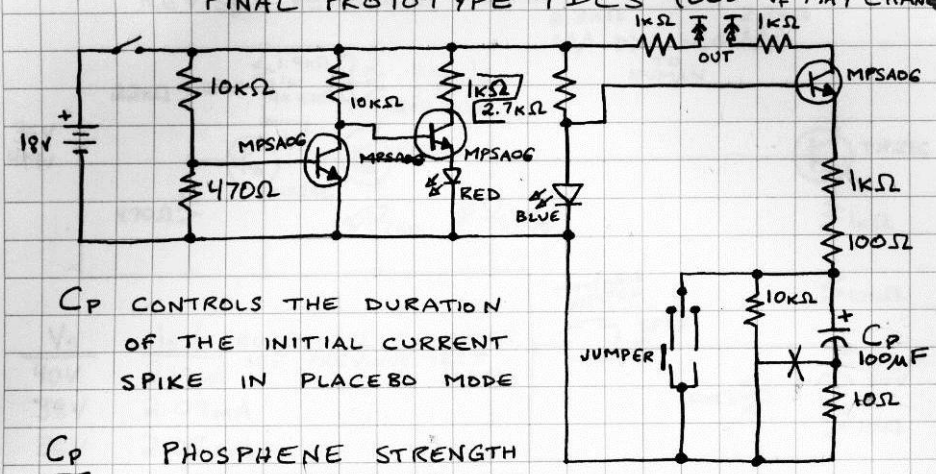

C_P CONTROLS THE DURATION OF THE INITIAL CURRENT SPIKE IN PLACEBO MODE

C_P	PHOSPHENE STRENGTH
470μF	REASONABLE
100μF	FEELS THE SAME AS NORMAL TURN-ON
47μF	FEELS SLIGHTLY WEAKER THAN NORMAL TURN-ON

$C_P = 100\mu F$

V_S	I_O (THROUGH GEL ELECTRODES, LEFT FRONTAL/UPPER BACK, NORMAL MODE)
20V	2.06 mA
18V	2.04 mA
17V	1.93 mA
16V	1.78 mA
15V	1.60 mA
14V	1.36 mA

[LOW BATTERY INDICATOR @ 14V]

02-24-13

REVISED RESEARCH tDCS

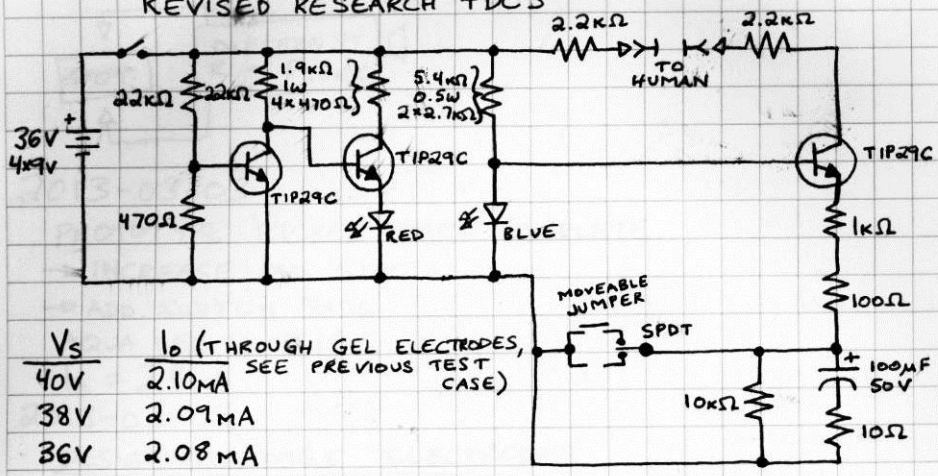

V_S	I_O (THROUGH GEL ELECTRODES, SEE PREVIOUS TEST CASE)
40V	2.10mA
38V	2.09mA
36V	2.08mA
34V	2.08mA
32V	2.06mA
30V	2.06mA
28V	2.04mA ← LOW BATTERY INDICATOR AT 28V
26V	2.03mA
22V	1.98mA
20V	1.75mA
18V	1.50mA
14V	1.00mA

2013-02-27

AFTER CONSTRUCTION ON PERFBOARD, V_S FROM 4x9V – I_O NORMAL: 2.11 mA

I_O FINAL PLACEBO : 0.22 mA
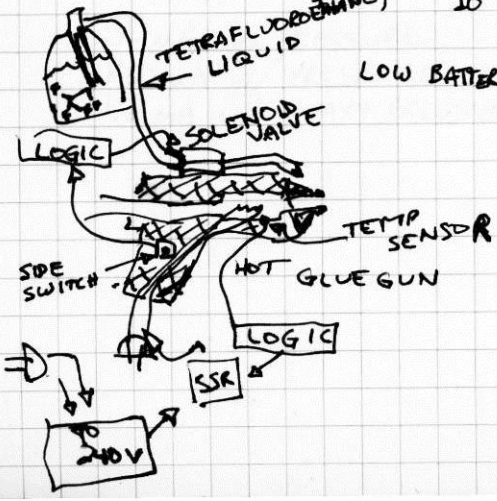
LOW BATTERY AT 18V CONFIRMED.